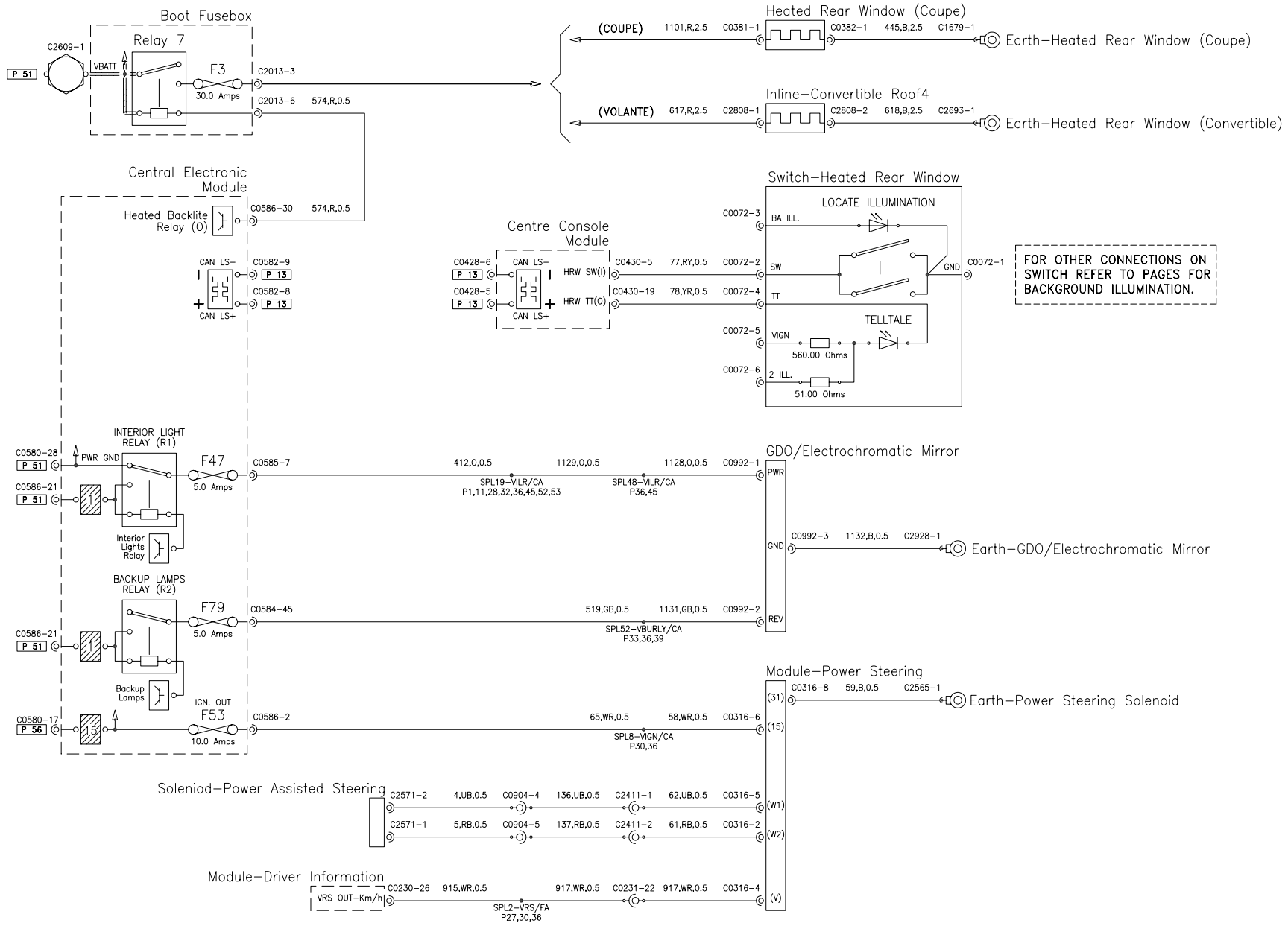

ASTON MARTIN	DRAWN BY AP	TITLE HRW, PAS ECU, GDO	PROJECT VH105/35	CPSC 00.06.51	AML DRG No.
	DATE 13-07-07	SUB-SYSTEM TITLE	BUILD IB	REV LEVEL 1	8G43-14T400-AA

A3 Circuit